13285 - TW TTi20 1/4" SQ. DR

ISSUE 3
28APR22
ECN-010301

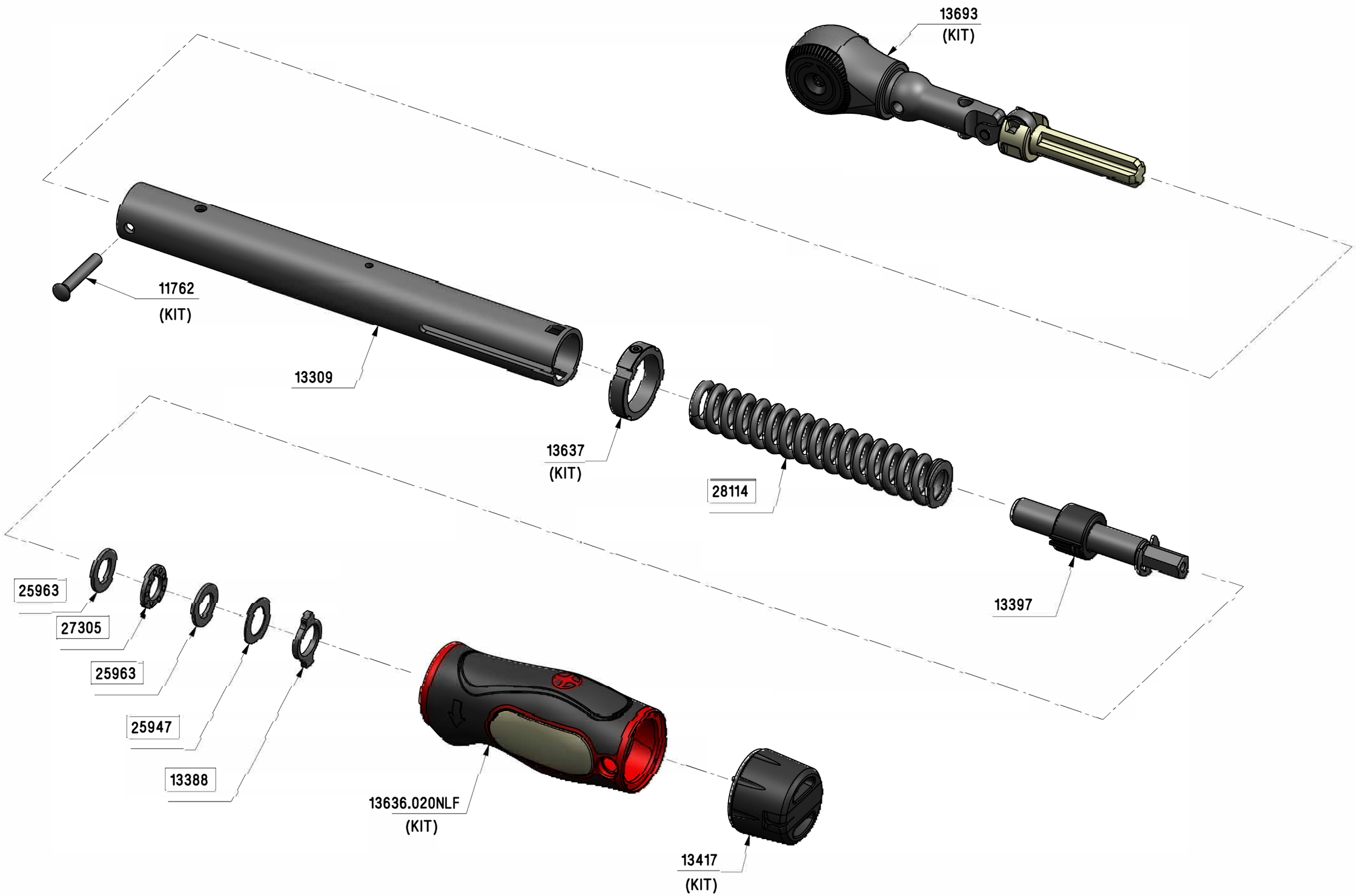

ALL BOXED PART NUMBERS ARE SUBJECT TO A MINIMUM ORDER QUANTITY