13024 - MDL 200 ADJ FEMALE 9 x 12mm N.m

NORBAR TORQUE TOOLS

ISSUE 17
29/11/11
ECR3934

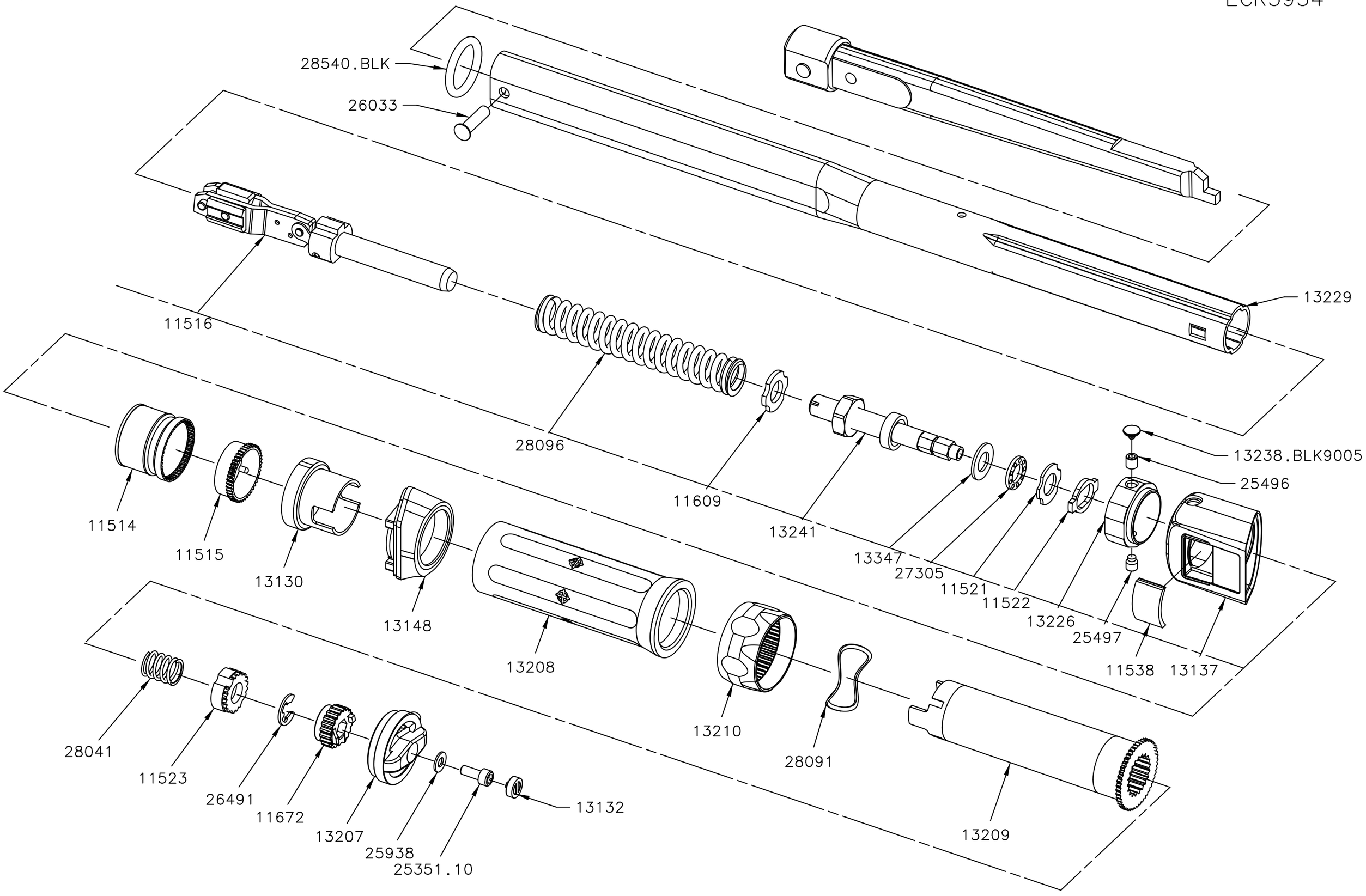

13024 - MDL 200 ADJ FEMALE 9 x 12mm N.m

ISSUE 17
29/11/11
ECR3934

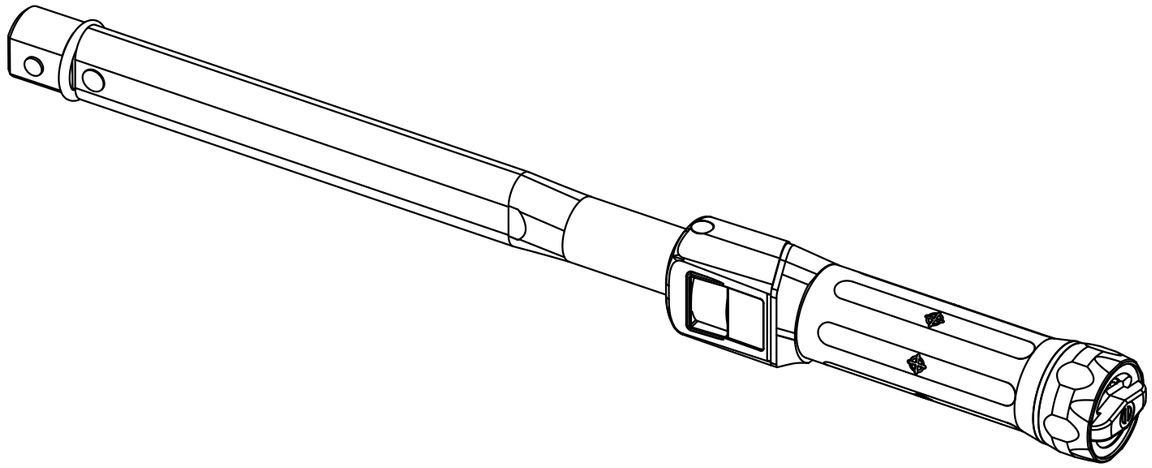

11514	1	SCALE ROTATING GEAR FOR PROF. WRENCH
11515	1	STATIONARY GEAR FOR PROF TORQUE WRENCH
11516	1	TRANSVERSE LINK ASSY PROFESSIONAL
11521	1	SHAPED WASHER
11522	1	END STOP
11523	1	HANDLE LOCKING COLLAR
11538	1	CLEAR LENS FOR PROFESSIONAL WRENCH
11609	1	SHAPED WASHER P TYPE PROF MATL HS4 2MM THICK
11611	1	MDL200 LEVER ARM FEMALE T/H 9 x 12mm
11672	1	DRIVE SLEEVE FOR SCREW
13130	1	SCALE ROTATING CAM
13132	1	END BUNG
13137	1	SCALE MECHANISM COVER
13148	1	STATIONARY HANDLE
13207	1	LOCKING KNOB MARK II
13208	1	ROTATING HANDLE ASSY MARK II
13209	1	SCALE ADJUSTING SHAFT
13210	1	HANDLE END PIECE
13226	1	THRUST WASHER - 2 SHOT Mk2
13229	1	MDL200 BODY TUBE - 2 SHOT MK2
13238.BLK9005	1	ULTRASONIC PLUG BLK RAL9005
13241	1	PROF ADJ SCREW 2 SHOT HANDLE MK2
13347	1	TRUTORQUE HARDENED WASHER
25351.10	1	M4 X 10 SCS
25496	1	SCR SKT GRUB M5x6 LG OVAL
25497	1	M5 X 6 SSS HALF DOG
25938	1	WASHER M4 STD. FLAT
26033	1	PIVOT PIN TES 3487
26491	1	SPRING CLIP 8-11 DIA EXT RSM.7
27305	1	SPECIAL THRUST BEARING FOR TORQUE WRENCHES
28041	1	HANDLE LOCKING SPRING
28091	1	WAVE SPRING FOR 2 SHOT HANDLE ASSY MARK II
28096	1	COMP. SPRING FOR TW MACHANISM
28540.BLK	1	O RING BLACK VITON BS208
Part No	Qty	Description